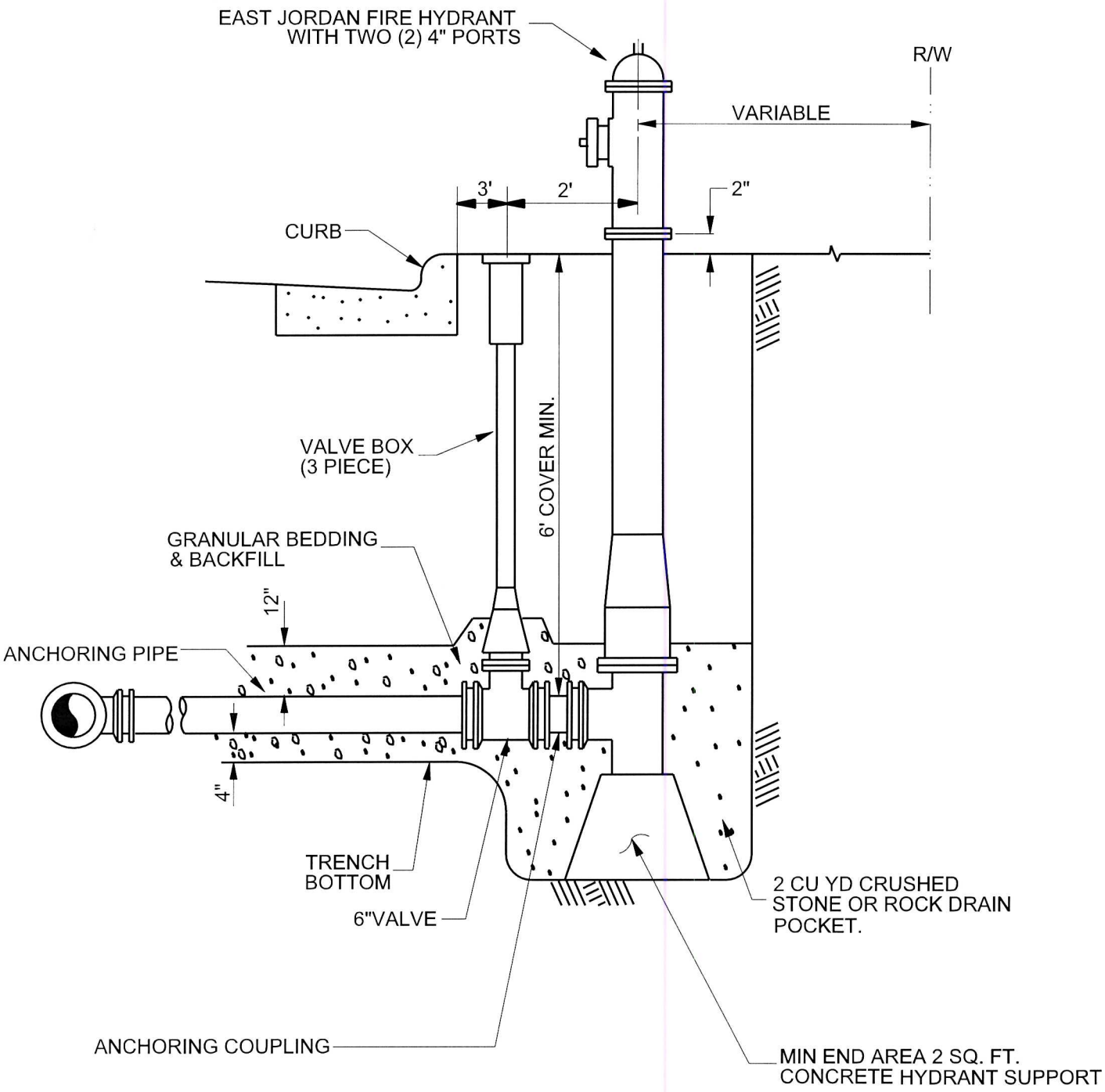

TYPICAL HYDRANT DETAIL

VILLAGE OF NILES

ENGINEERING DIVISION